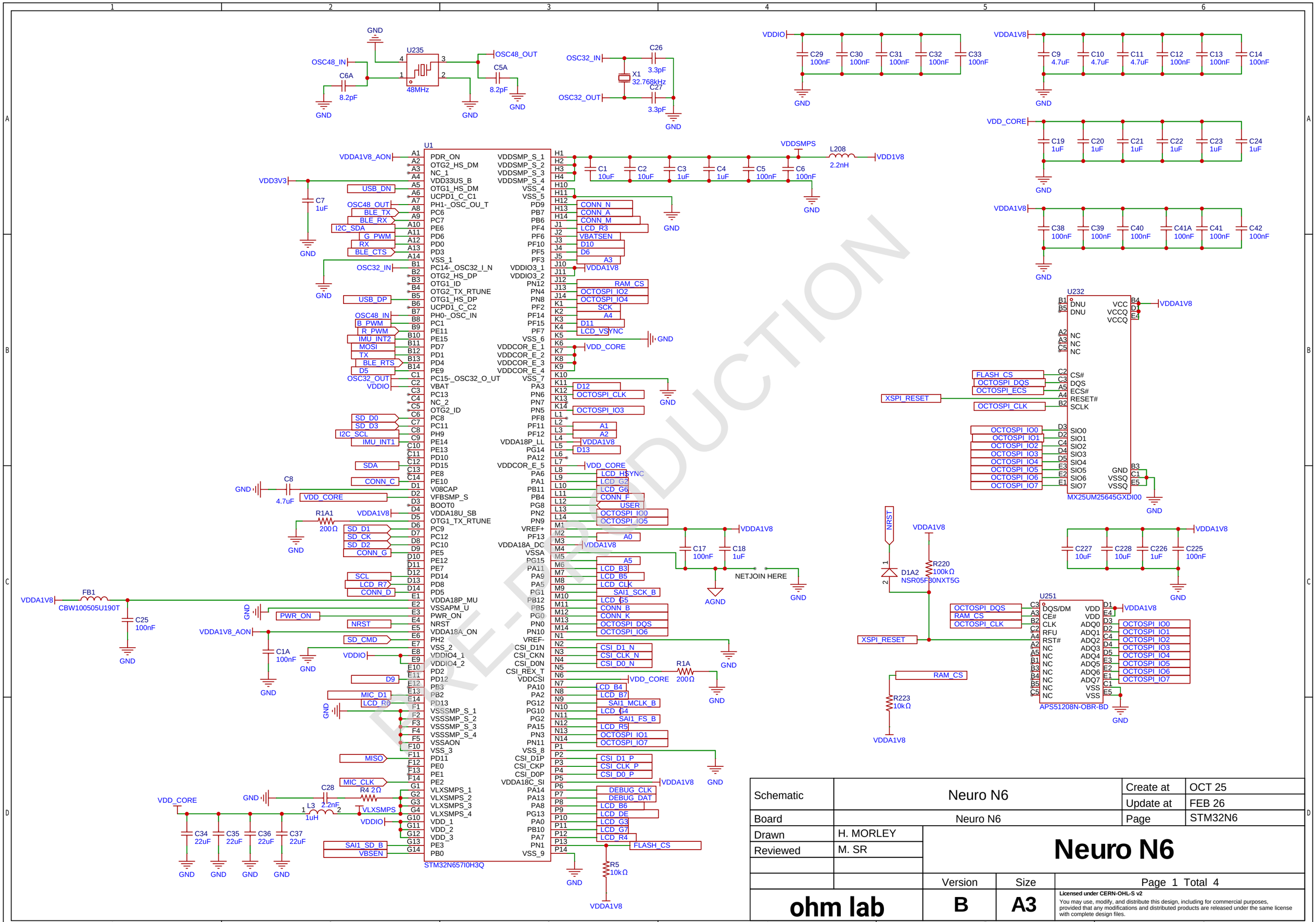

Schematic	Neuro N6	Create at	OCT 25
		Update at	FEB 26
Board	Neuro N6	Page	STM32N6
Drawn	H. MORLEY		
Reviewed	M. SR		

Neuro N6

Version	Size	
B	A3	Page 1 Total 4

ohm lab

Licensed under CERN-OHL-S v2
You may use, modify, and distribute this design, including for commercial purposes, provided that any modifications and distributed products are released under the same license with complete design files.

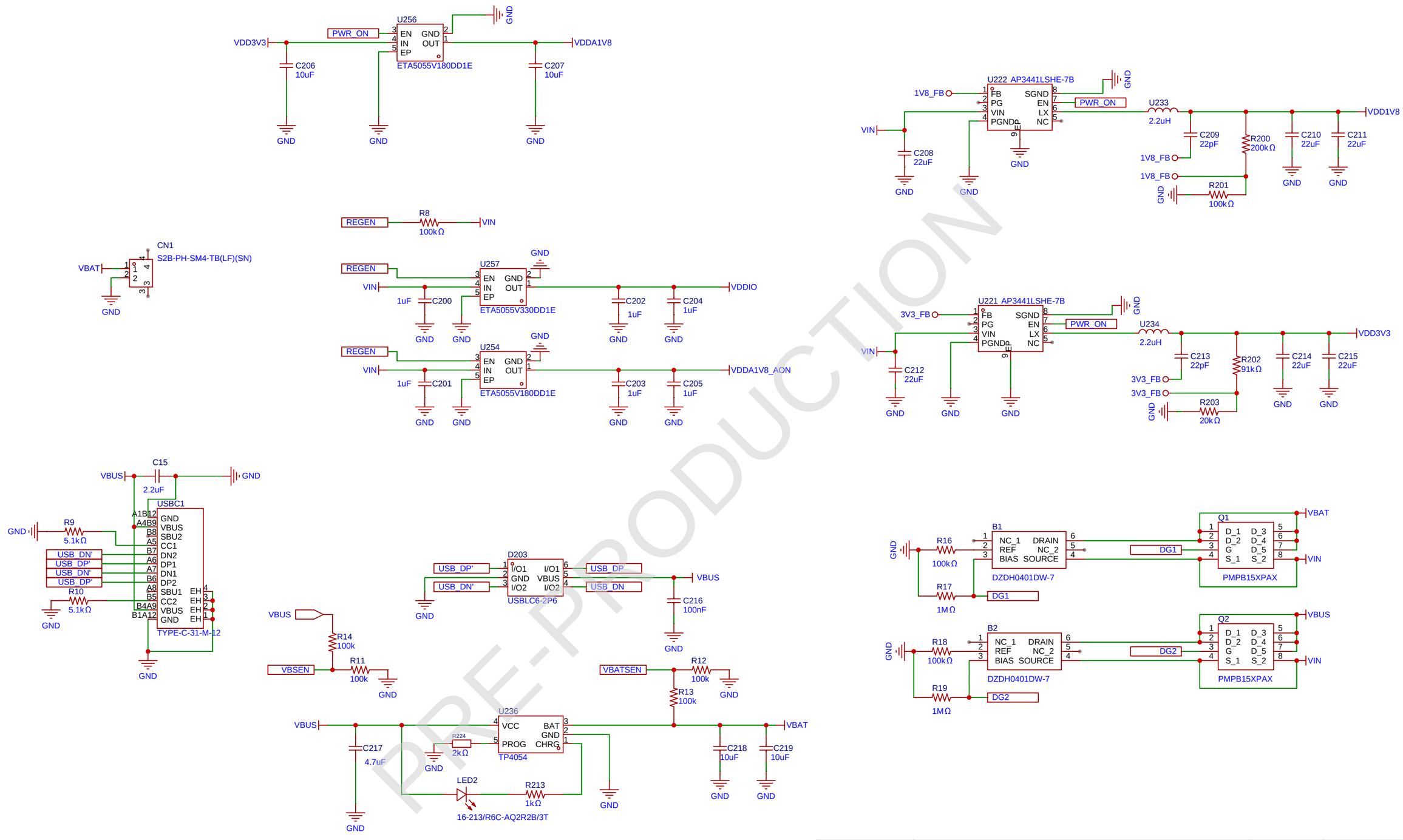

PRE-PRODUCTION

Schematic	Neuro N6	Create at	OCT 25
		Update at	FEB 26
Board	Neuro N6	Page	POWER
Drawn	H. MORLEY		
Reviewed	M. SR		

Neuro N6

Version	Size	Page 2 Total 4
B	A3	

ohm lab

Licensed under CERN-OHL-S v2
You may use, modify, and distribute this design, including for commercial purposes, provided that any modifications and distributed products are released under the same license with complete design files.

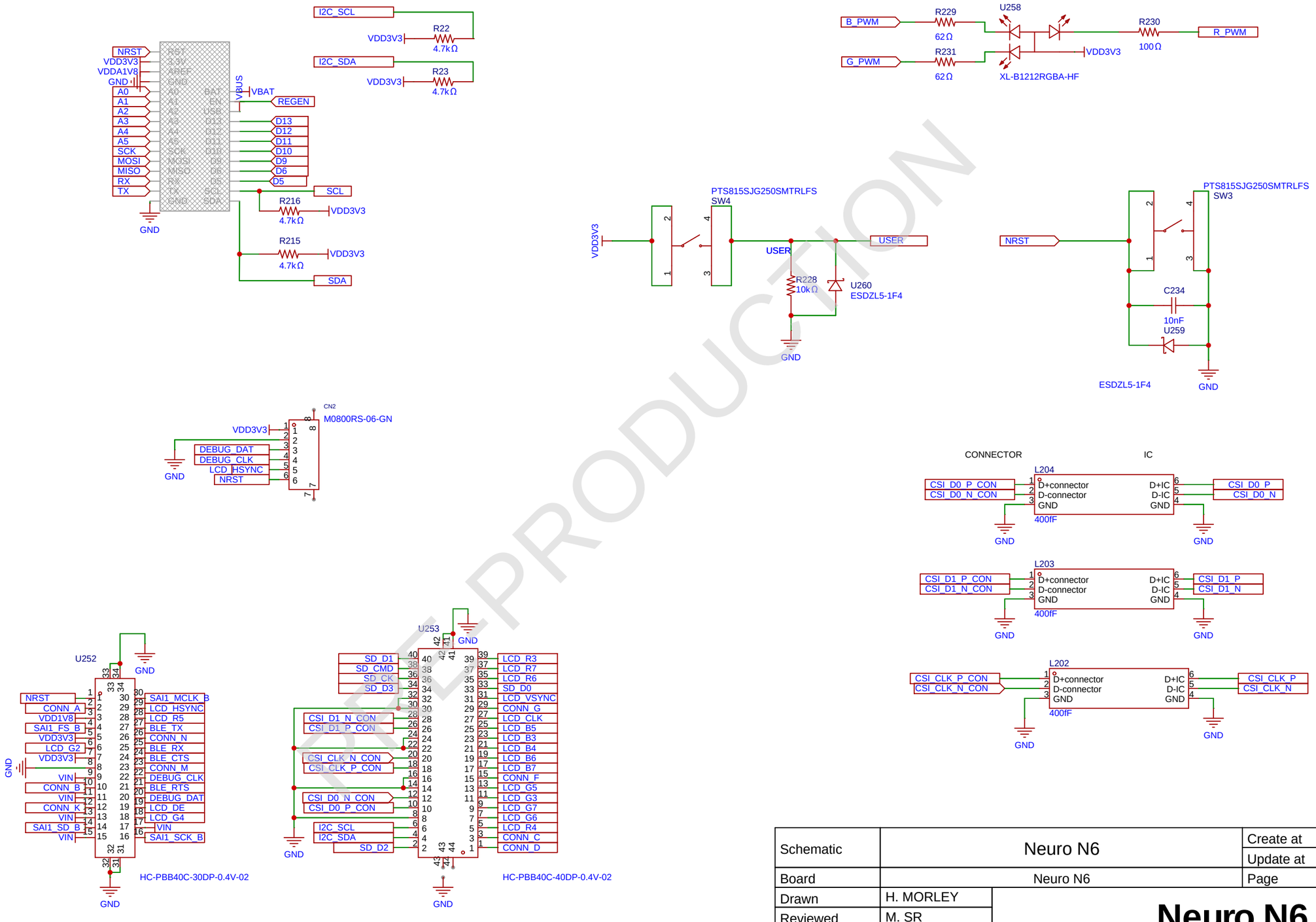

PRE-PRODUCTION

Schematic	Neuro N6	Create at	OCT 25
		Update at	FEB 26
Board	Neuro N6	Page	INTERFACE
Drawn	H. MORLEY		
Reviewed	M. SR		

Neuro N6

	Version	Size	
ohm lab	B	A3	Page 3 Total 4

Licensed under CERN-OHL-S v2
You may use, modify, and distribute this design, including for commercial purposes, provided that any modifications and distributed products are released under the same license with complete design files.

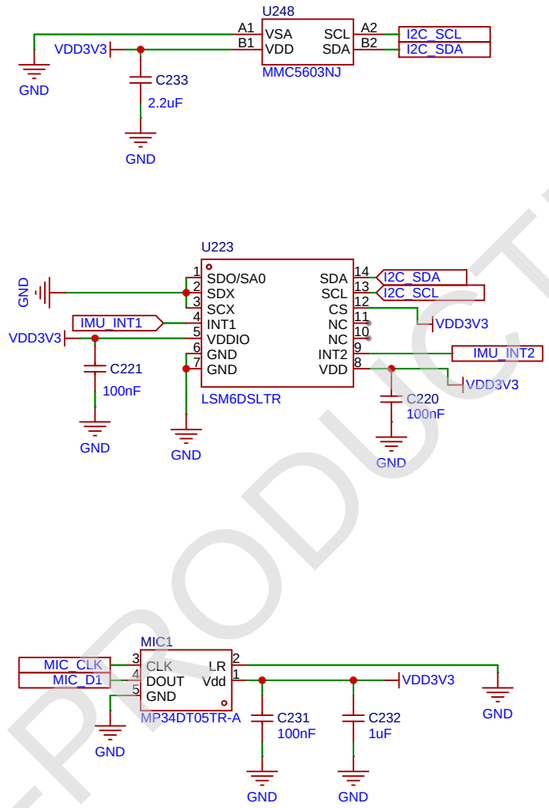

PRE-PRODUCTION

Schematic	Neuro N6	Create at	OCT 25
		Update at	FEB 26
Board	Neuro N6	Page	SENSORS
Drawn	H. MORLEY		
Reviewed	M. SR		

Neuro N6

ohm lab	Version	Size	Page 4 Total 4
	B	A3	

Licensed under CERN-OHL-S v2
You may use, modify, and distribute this design, including for commercial purposes, provided that any modifications and distributed products are released under the same license with complete design files.